HX-1404

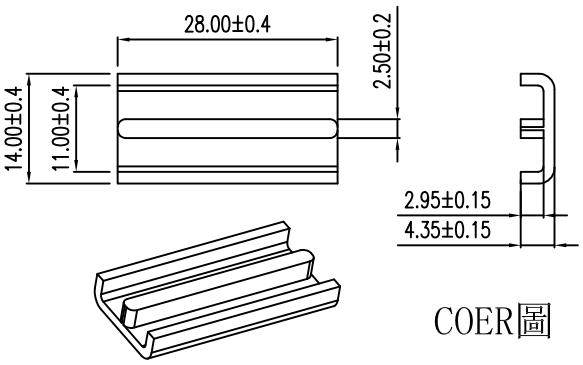

COER圖

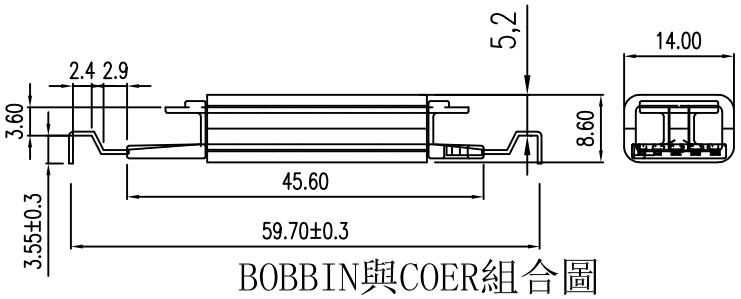

BOBBIN與COER組合圖

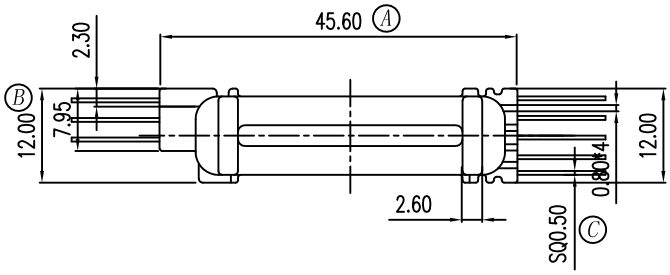

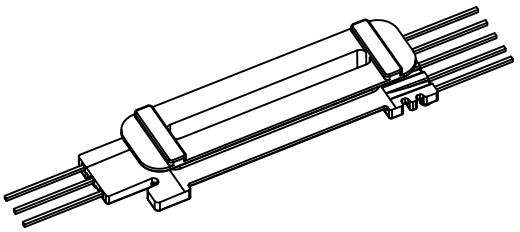

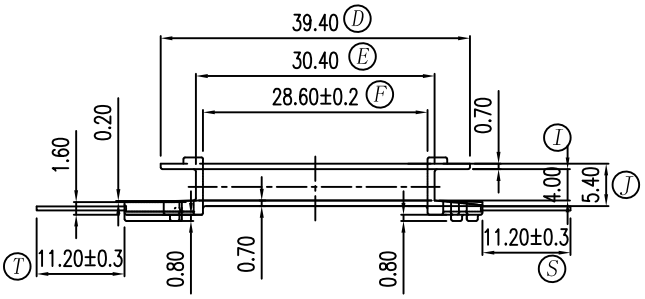

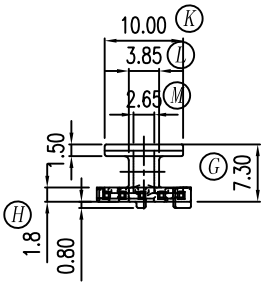

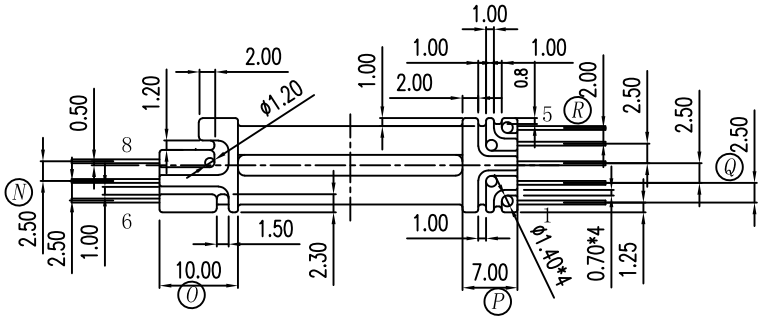

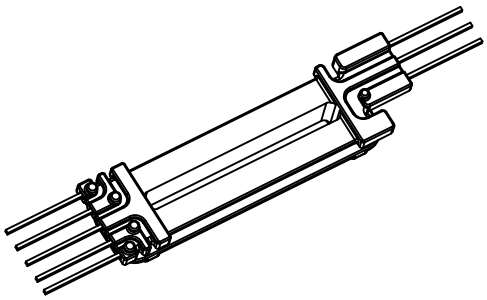

客户确认签回		RoHS HF

REV.	REVISION RECORD	DATE	REV	REVISION RECORD	DATE
01			03		
02			04		

NAME	EE-14(8P)	MATERIAL	PM-9820	SCALE	1:1	ANGLE	±1°
DRAWING NO.	HX 1404	PIN MATERIAL	CP WIRE	UNIT	m/m	REV.	00

东莞市华欣塑胶制品有限公司
DONGGUAN HUAXIN PLASTIC MANUFACTURING PRODUCTS CO.,LTD.
TEL:0769-86388088 86388188 86388288 FAX:0769-86388111
http://www.hxbobbin.com E-Mail:hxbobbin@vip.163.com

TOLERANCE OF PIN DIA ±0.05

PIN TENSION LOAD 1.0 kg MIN

UL REC.:94V0

TOLERANCE:0<L≤4:±0.1 4<L≤16:±0.2 16<L≤63:±0.3

DRAWN & DRAFTED BY	LIN HUA JING	CHECKED & APPROVED BY		DATE:	MAY 14 2014