HX-B125A

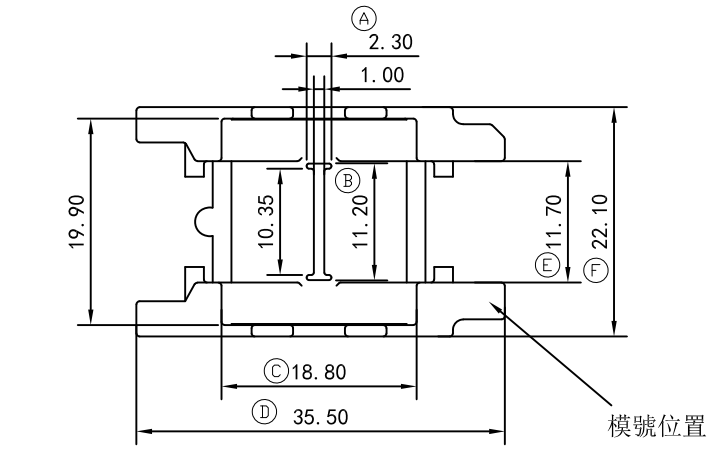

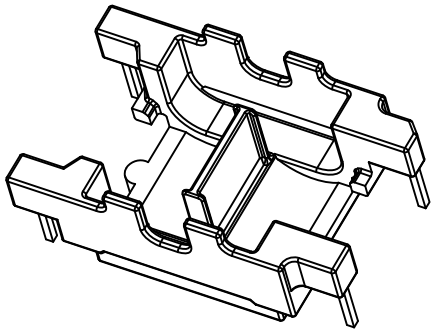

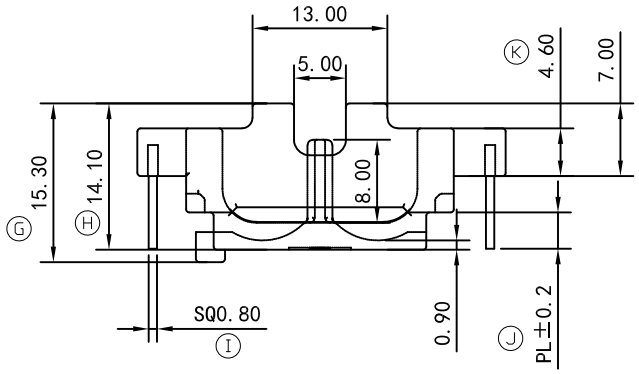

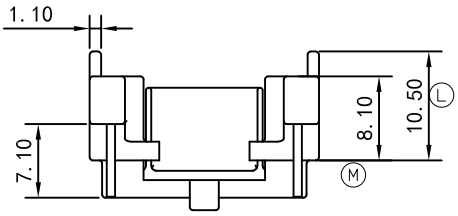

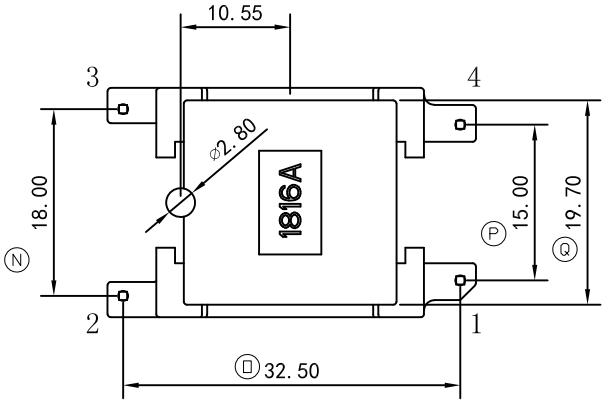

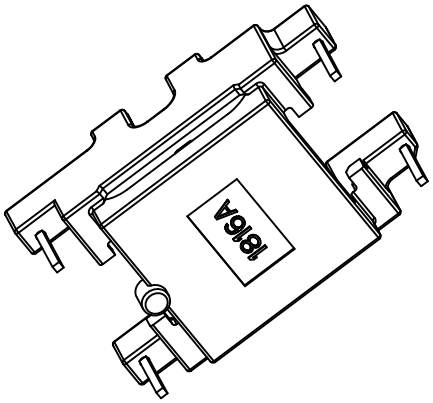

A	B	C	D	E	F	G	H	I	J	K	L	M	N	O	P	Q
2.40	11.30	18.80	35.50	11.70	22.10	15.30	14.10	0.80	PL	4.60	10.50	8.10	18.00	32.50	15.00	19.70
±0.1	±0.2	±0.3	±0.3	±0.2	±0.3	±0.2	±0.2	±0.05	±0.2	±0.2	±0.2	±0.2	±0.3	±0.3	±0.2	±0.3

客户确认
签回

RoHS
HF

REV.	REVISION RECORD	DATE	REV	REVISION RECORD	DATE
01			03		
02			04		

NAME	SQ-1816A(4P)	MATERIAL	T375HF	SCALE	1:1	ANGLE	±1°
DRAWING NO.	HX B125A	PIN MATERIAL	CP WIRE	UNIT	m/m	REV.	00

东莞市华欣塑胶制品有限公司
DONGGUAN HUAXIN PLASTIC MANUFACTURING PRODUCTS CO.,LTD.
TEL:0769-86388088 86388188 86388288 FAX:0769-86388111
http://www.hxbobbin.com E-Mail:hxbobbin@vip.163.com

TOLERANCE OF PIN DIA ±0.05

PIN TENSION LOAD 1.0 kg MIN

UL REC.:94V0

TOLERANCE:0<L≤4:±0.1 4<L≤16:±0.2 16<L≤63:±0.3

DRAWN & DRAFTED BY	LIN HUA JING	CHECKED & APPROVED BY		DATE:	NOV 05 2024