HX-B080

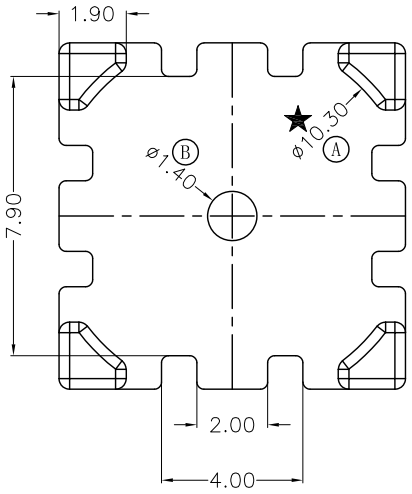

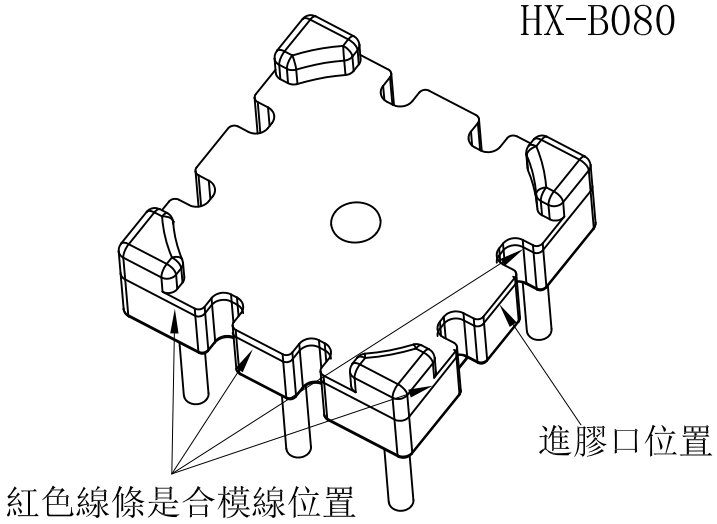

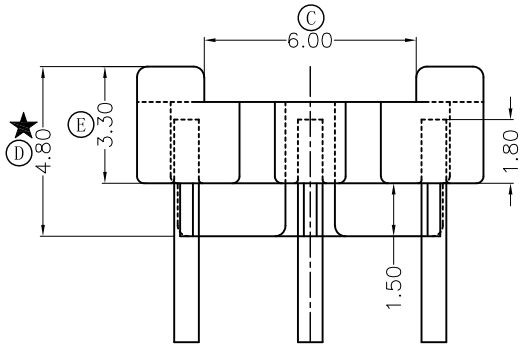

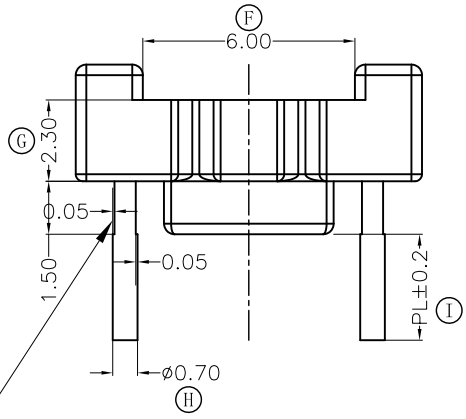

PIN要咬花外露

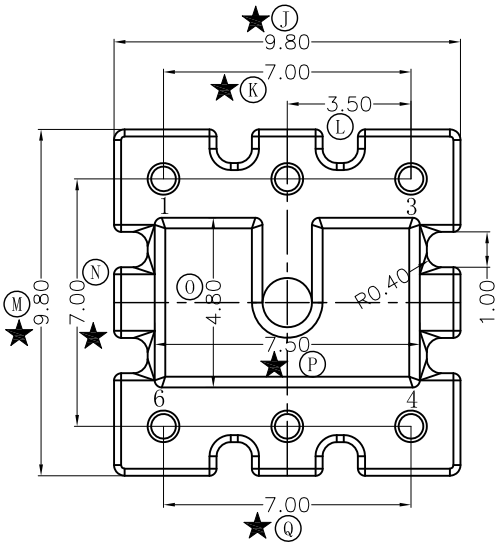

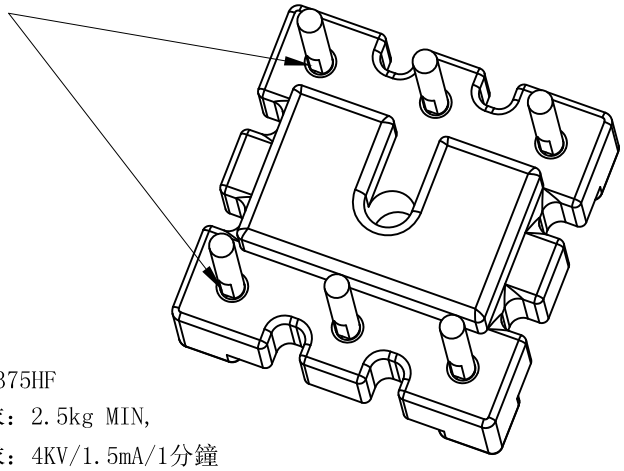

備註說明：

1. 材質：T375HF
2. 強度要求：2.5kg MIN,
3. 耐壓要求：4KV/1.5mA/1分鐘
4. 焊錫溫度：450° ±10° 3SEC
5. 拉力：焊後拉力 1.5kg MIN
6. 模具狀況：正式模

客户确认签回	

RoHS HF

REV.	REVISION RECORD	DATE	REV	REVISION RECORD	DATE
01			03		
02			04		

NAME	10X10 BASE(6P)	MATERIAL	T375HF	SCALE	1:1	ANGLE	±1°
DRAWING NO.	HX-B080	PIN MATERIAL	CP WIRE	UNIT	m/m	REV.	01

东莞市华欣塑胶制品有限公司
DONGGUAN HUAXIN PLASTIC MANUFACTURING PRODUCTS CO.,LTD.
TEL:0769-86388088 86388188 86388288 FAX:0769-86388111
http://www.hxbobbin.com E-Mail:hxbobbin@vip.163.com

TOLERANCE OF PIN DIA ±0.05

PIN TENSION LOAD 1.5 kg MIN

UL REC.:94V0

TOLERANCE:0<L≤4:±0.1 4<L≤16:±0.2 16<L≤63:±0.3

DRAWN & DRAFTED BY	Liu Xiong	CHECKED & APPROVED BY		DATE:	JUL 31 2020