HX-B068A

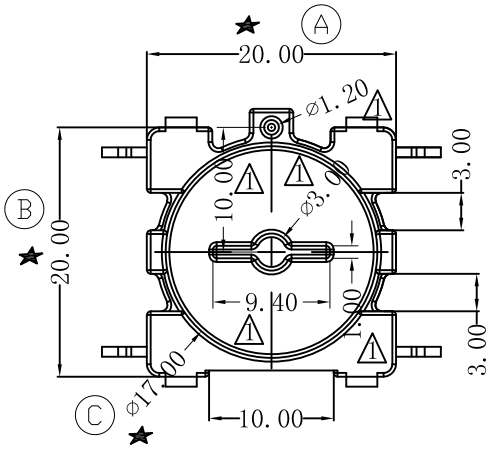

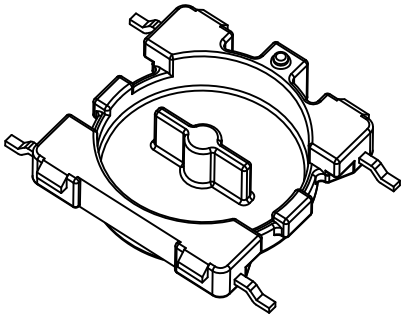

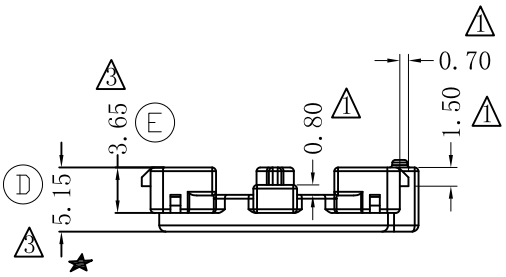

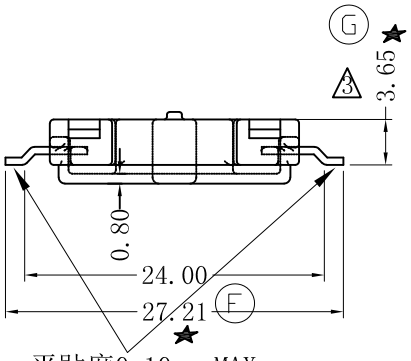

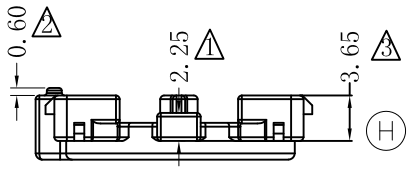

平貼度0.10mm MAX

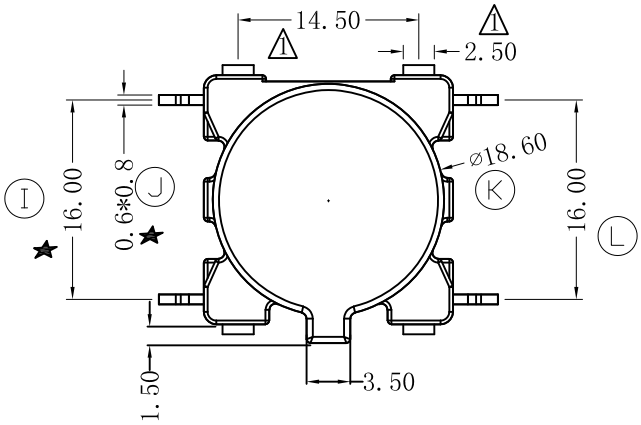

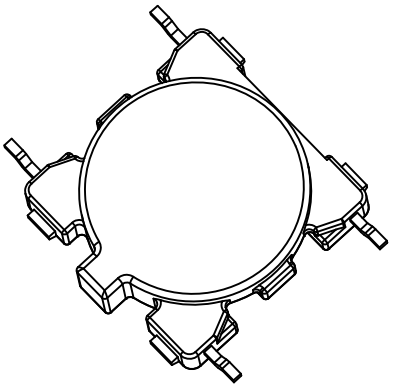

量產模

帶有 ★ 尺寸為重點管控尺寸

客户确认签回	

RoHS HF

REV.	REVISION RECORD	DATE	REV	REVISION RECORD	DATE
01	1 尺寸變更	2019/11/15	03	3 尺寸變更	2020/01/06
02	2 凸點高度尺寸0.80改為0.60	2019/12/11	04		

NAME	T-14S BASE(4P)	MATERIAL	PM-9820	SCALE	1:1	ANGLE	±1°
DRAWING NO.	HX B068A	PIN MATERIAL	CP WIRE	UNIT	m/m	REV.	03

东莞市华欣塑胶制品有限公司
DONGGUAN HUAXIN PLASTIC MANUFACTURING PRODUCTS CO.,LTD.
TEL:0769-86388088 86388188 86388288 FAX:0769-86388111
http://www.hxbobbin.com E-Mail:hxbobbin@vip.163.com

TOLERANCE OF PIN DIA ±0.05

PIN TENSION LOAD kg MIN

UL REC.:94V0

TOLERANCE:0<L≤4:±0.1 4<L≤16:±0.2 16<L≤63:±0.3

DRAWN & DRAFTED BY	LIN HUA JING	CHECKED & APPROVED BY		DATE:	NOV 08 2019