HX-2416

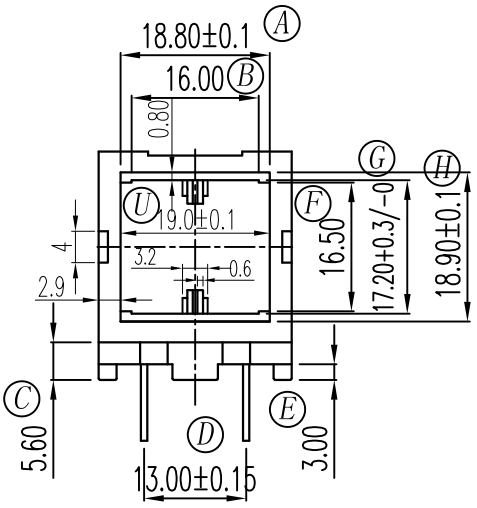

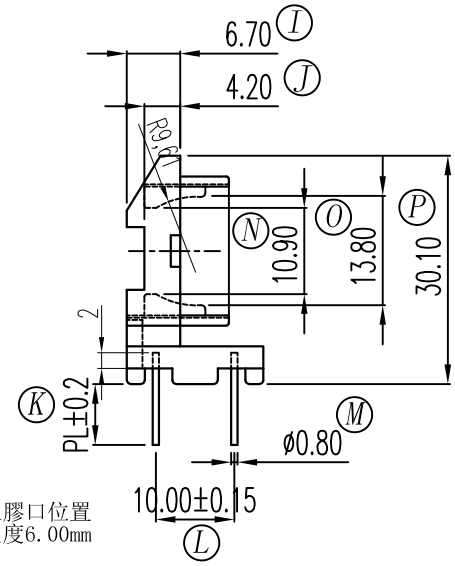

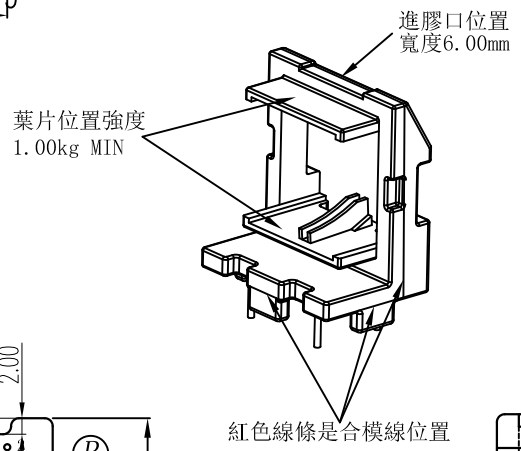

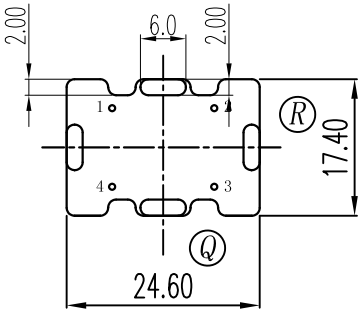

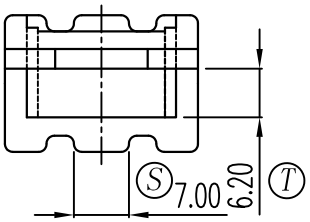

備註說明：

1. 材質：T375HF
2. 強度要求：2.50kg MIN,葉片位置是1.00kg MIN
3. 耐壓要求：4KV/1.5mA/1分鐘
4. 焊錫溫度：450° ±10° 3SEC
5. 拉力：焊前是1.00kg MIN,焊後是1.5kg MIN
6. 模具狀況：正式模

A	B	C	D	E	F	G	H	I	J	K	L	M	N	O	P	Q	R	S	T	U
18.80	16.00	5.60	13.00	3.00	16.50	17.20	18.90	6.70	4.20	PL	10.00	0.80	10.90	13.80	30.10	24.60	17.40	7.00	6.20	19.0
±0.1	±0.2	±0.2	±0.15	±0.1	±0.3	+0.3 -0	±0.1	±0.2	±0.2	±0.2	±0.15	±0.05	±0.2	±0.2	±0.3	±0.3	±0.3	±0.2	±0.2	±0.1

客户确认签回

RoHS HF

REV.	REVISION RECORD	DATE	REV	REVISION RECORD	DATE
01			03		
02			04		

NAME	ET-24(4P)	MATERIAL	T375HF	SCALE	1:1	ANGLE	±1°
DRAWING NO.	HX-2416	PIN MATERIAL	CP WIRE	UNIT	m/m	REV.	00

东莞市华欣塑胶制品有限公司
DONGGUAN HUAXIN PLASTIC MANUFACTURING PRODUCTS CO.,LTD.
TEL:0769-86388088 86388188 86388288 FAX:0769-86388111
http://www.hxbobbin.com E-Mail:hxbobbin@vip.163.com

TOLERANCE OF PIN DIA ±0.05

PIN TENSION LOAD kg MIN

UL REC.:94V0

TOLERANCE:0<L≤4:±0.1 4<L≤16:±0.2 16<L≤63:±0.3

DRAWN & DRAFTED BY	LIN HUA JING	CHECKED & APPROVED BY		DATE:	JAN 25 2018