HX-3239

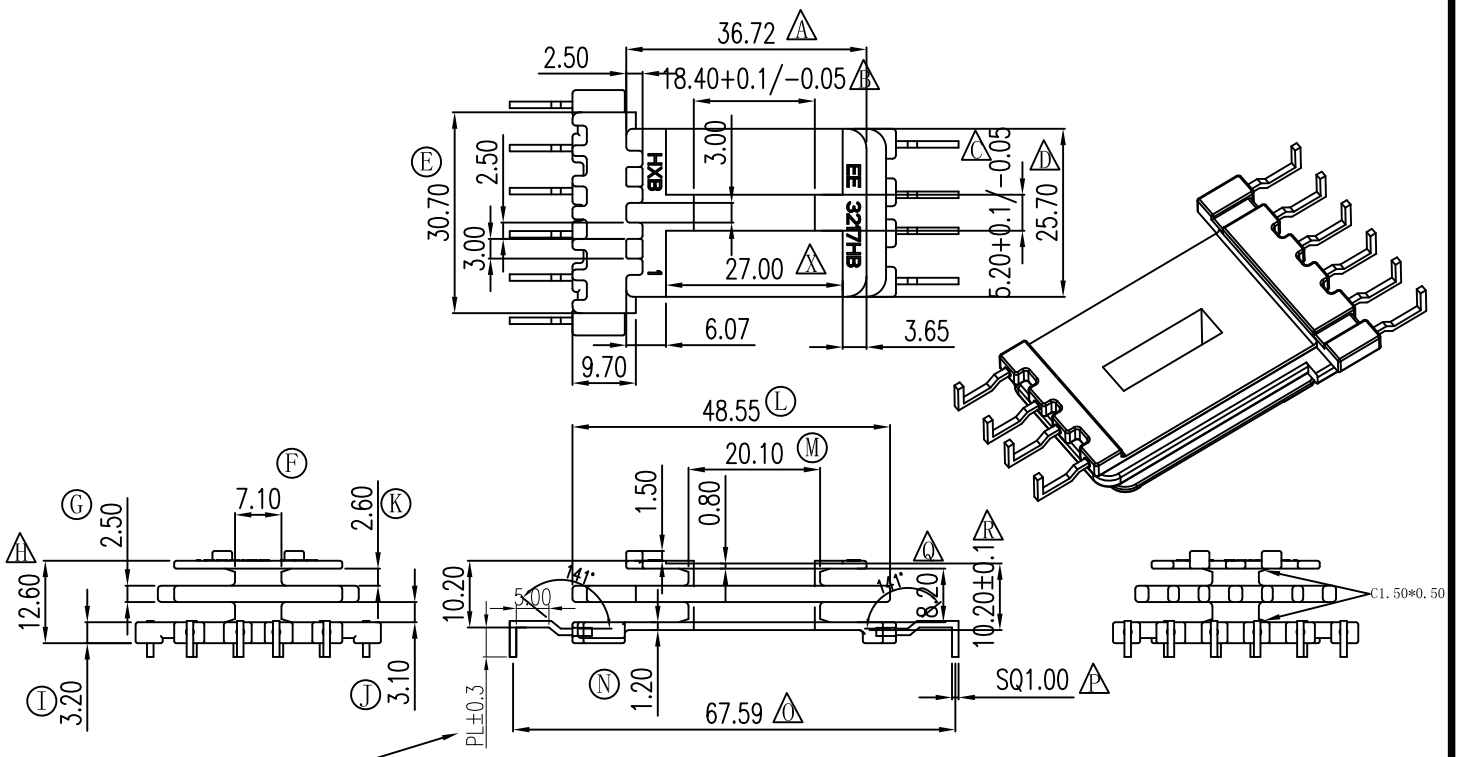

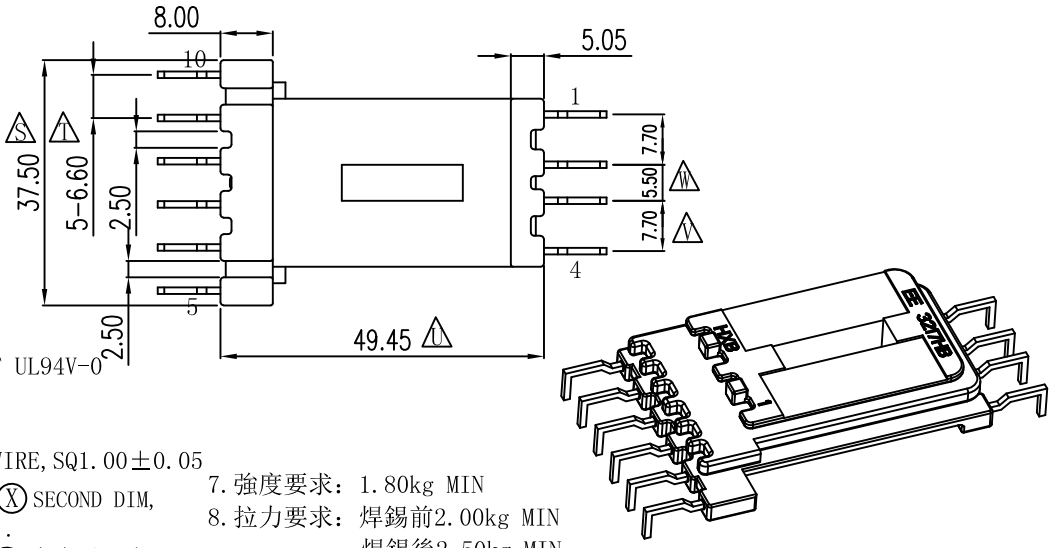

备註說明：

1. PART NO.: HX-3239 量產模
2. MATERIAL: PM-9820 MUST MEET UL94V-0
3. COLOR: BLACK
4. CORE TYPE: EE-3217HB
5. MATERIAL OF PIN : 3/4H CP WIRE, SQ1.00±0.05
6. DIMENSION MARK : △ MAIN DIM., Ⓧ SECOND DIM, OTHERWIRE ARE REFERENTIAL DIM..
   标示的 △ 为重要尺寸，标示的 Ⓧ 为次要尺寸。
7. 强度要求：1.80kg MIN
8. 拉力要求：焊錫前2.00kg MIN
   焊錫後2.50kg MIN

A	B	C	D	E	F	G	H	I	J	K	L	M	N	O	P	Q	R	S	T	U	V	W
36.72	18.40	5.20	25.70	30.70	7.10	2.50	12.60	3.20	3.10	2.60	47.95	20.10	1.20	67.59	1.00	8.20	10.20	37.50	6.60	49.45	7.70	5.50
±0.3	+0.1 -0.05	+0.1 -0.05	±0.3	±0.3	±0.2	±0.1	±0.2	±0.1	±0.1	±0.1	±0.3	±0.3	±0.1	±0.3	±0.05	±0.2	±0.1	±0.3	±0.2	±0.3	±0.2	±0.2

客户确认签回

RoHS HF

REV.	REVISION RECORD	DATE	REV	REVISION RECORD	DATE
01	B尺寸由18.50±0.1改为18.40+0.1/-0.05,C尺寸由5.50±0.1改为5.20+0.1/-0.05	2017/08/14	03	L尺寸47.95改為48.55	2018/12/03
02	绕线区R0.50改为C1.50*0.50	2017/09/04	04		

NAME	EE-3217HB(10P)	MATERIAL	PM-9820	SCALE	1:1	ANGLE	±1°
DRAWING NO.	HX 3239	PIN MATERIAL	CP WIRE	UNIT	m/m	REV.	03

东莞市华欣塑胶制品有限公司
DONGGUAN HUAXIN PLASTIC MANUFACTURING PRODUCTS CO.,LTD.
TEL:0769-86388088 86388188 86388288 FAX:0769-86388111
http://www.hxbobbin.com E-Mail:hxbobbin@vip.163.com

TOLERANCE OF PIN DIA ±0.05

PIN TENSION LOAD kg MIN

UL REC.:94V0

TOLERANCE: 0<L≤4: ±0.1 4<L≤16: ±0.2 16<L≤63: ±0.3

DRAWN & DRAFTED BY	LIN HUA JING	CHECKED & APPROVED BY		DATE:	MAY 04 2016